This guide provides specifications for Unitronics' Short Range and Long Range Local Expansion Adapter Kit for Uni-I/O™.

The Short and Long Range Local Expansion Adapter Kits allow you to increase the number of I/Os connected to a single UniStream™ by linking it to an additional row of Uni-I/O™ modules.

All Local Expansion Adapter Kits comprise a Base unit, an End unit, and a connecting cable.

Note that there are two adapter series:

- **UAG-XK**
  Compatible with UniStream® controller panels that comprise a **DIN-rail type** structure on the panel rear. You snap the Base unit of a UAG-XK series adapter onto it.
- **UAG-CX**
  Compatible with UniStream® controllers that comprise an **I/O Expansion Jack**. You plug the base unit of UAG-CK series adapter into it.

Adapter Models

Model	Install via	Integrated Power Supply	Number of supported modules
UAG-XKxxx	Panel (DIN-rail structure)	No	8, including modules installed on the panel
UAG-XKPxxx		Yes	16, in addition to any modules installed on the panel
UAG-XKPLxxx		Yes	
UAG-CX-XKPxxx	Controller (Jack)	Yes	16

Power Supply

UniStream controller panels + CPU-for-Panel can supply power to a maximum of 8 modules, Uni-I/O™ and/or Uni-COM™, with power. Adapters that do not have a power supply draw power from UniStream and supply it to the modules. This means, for example, that if there are 3 modules snapped onto the panel, you can add an additional 5 via this type of adapter.

Adapters with integrated power supply must be connected to a 24VDC power source. The adapter can then supply up to 16 modules with power, regardless of any mounted on the panel

Installation Guides are available in the Unitronics Technical Library at www.unitronics.com.

Module Support

UniStream™ panels comprising a DIN-rail structure on the panel rear (compatible with UAG-XK)

The number of modules in the next table includes:

- Modules that may be snapped to the rear of the panel
- Modules linked to the CPU via a Local Expansion Adapter Kit (Uni-I/O modules only).

Note that:

- Any Uni-COM™ modules snapped to the back of the UniStream HMI panel must be connected directly to the CPU-for-Panel or to another Uni-COM module.
- You must plug the Base Unit into the last element on the back of the UniStream™ HMI Panel. This may be a Uni-COM™, or Uni-I/O™ module.
- If the CPU-for-Panel is the only element that is plugged onto the back of the HMI Panel, plug the Base unit into it.

Important Note:
The Base and End Units of the Short-range and Long-range models look similar but are **not interchangeable**, do not mix between them.

UniStream™ controllers that comprise an I/O Expansion Jack (compatible with UAG-CX)

The number of modules in the next table refers only to the modules connected to the adaptor.

These controllers lack the DIN-rail structure, and cannot be installed with Uni-COM or Uni-I/O.

	UAG-XKxxx	UAG-XKPxxx, UAG-CX-XKPxxx	UAG-XKPLxxxx
	Up to 8 modules	Up to 16 modules	Up to 16 modules

Power Supply	UAG-XKxxx	UAG-XKPxxx, UAG-CX-XKPxxx	UAG-XKPLxxxx
Input voltage	Not applicable	12 or 24 VDC	12 or 24 VDC
Permissible range	Not applicable	10.2 to 28.8 VDC	10.2 to 28.8 VDC
Max. current consumption	Not applicable	0.9@12VDC, 0.5A@24VDC	0.9@12VDC, 0.5A@24VDC

Available Cable Length	
Module	Length
UAG-XK125	125cm (49”)
UAG-XKP125	125cm (49”)
UAG-CX-XKP125	125cm (49”)
UAG-XK300	300cm (118”)
UAG-XKP300	300cm (118”)
UAG-CX-XKP300	300cm (118”)
UAG-XKPL600	600cm (20’)
UAG-XKPL1200	1200cm (40’)
UAG-XKPL1500	1500cm (50’)
UAG-XKPL2000	2000cm (66’)
UAG-XKPL3000	3000cm (98’)

LED Indications			
Base Unit	There are no LEDs in the Base Unit.		
End Unit	Green	Output state	Comment
UAG-XKxxx	Link	Off	Cable is not connected or no power from the Base unit
		On	Link with the base unit has been established
UAG-XKPxxx UAG-CX-XKPxxx UAG-XKPLxxxx	Power	Off	No external power
		On	External power is connected to the unit
	Link	Off	Cable is not connected or no power from the Base unit
		On	Link with the base unit has been established

Daisy-Chaining: Extending and Expanding I/Os

Up to five Local Expansion Adapters may be chained to each other. The maximum number of I/O modules that can be connected to a single controller is:

- 85, for UniStream panel + CPU-for-Panel. This includes modules snapped to the panel's rear.
- 80, for UniStream™ controllers with I/O Expansion Jack.

UniStream can be expanded locally in a single cabinet, using Short range Adapters of up to 3 meters each (UAG-XKxxxx , UAG-XKPxxxx and UAG-CX-XKPxxxx).

It can also be expanded further to another cabinet, using the Long Range Expansion Adapter (UAG-XKLxxxx) as shown in the following drawings:

Single Cabinet

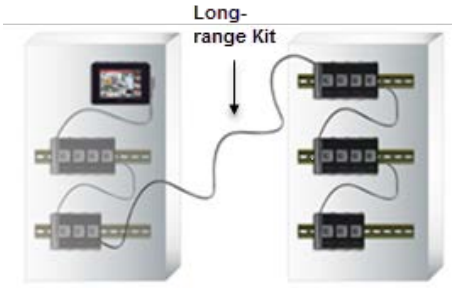

Two Cabinets

Daisy-chaining Rules

In order to connect a UniStream™ controller to more than one row of I/O modules via Local I/O Expansion adapters, you must follow these rules:

UniStream™ comprising a DIN-rail structure (compatible with UAG-XK)

- Up to **2** Short-range adapters can be daisy-chained to the CPU-for-Panel or to any of the modules that are connected directly to the CPU on the back of the HMI Panel. These may be either two UAG-XKPxxxx (that include an integrated power-supply), or one UAG-XKPxxxx and one UAC-XKxxxx.
- When daisy chaining, you can include only **1** Long-range adapter. You may connect it directly to the CPU-for-Panel or to any of the elements that are expanded from it.

UniStream™ controllers comprising an I/O Expansion Jack (compatible with UAG-CX)

- Up to **2** Short-range adapters can be daisy-chained to the controller. A UAG-CX-XKPxxx must be plugged into the jack, and may be followed by a UAG-XKPxxxx or one UAC-XKxxxx.

UniStream™ controllers of both series

- Since long range adaptors have integrated power supplies, you may follow any Long-range adapter by daisy-chaining up to **2** Short range adapters. These may be either two UAG-XKPxxxx, or one UAG-XKPxxxx and one UAG-XKxxxx.

Configuration Examples

Notes:

1. All examples use the USP-104-B10 10.4” HMI panel.
2. The amount of modules at all examples relate to Uni-I/O modules. You can mix Uni-I/O modules with Uni-I/O Wide modules,considering that 1 Uni-I/O Wide module equals 1½ Uni-I/O module.

Configuring for maximum I/Os

The figure below shows the greatest number of I/O modules that can be connected to a single UniStream™ controller using Uni-I/O modules and 5 Local I/O Expansion adapters with power supplies.

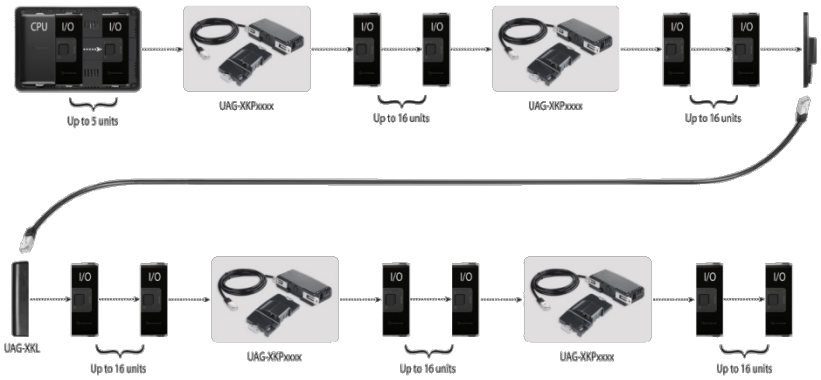

Configurations with Short-range adapter, no Power Supply (UAG-XKxxxx).

If UAG-XKxxxx is the only adapter connected to the controller, the system can support up to 8 modules.

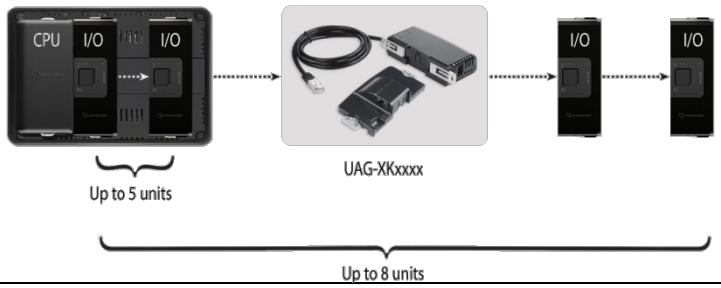

If a UAG-XKxxxx follows another adapter with an integrated power supply, the support capacity of that powered module limits the number of Uni-I/Os that can be connected to the UAG-XKxxxx; in any event, no more than 8 Uni-I/Os can follow a UAG-XKxxxx adapter.

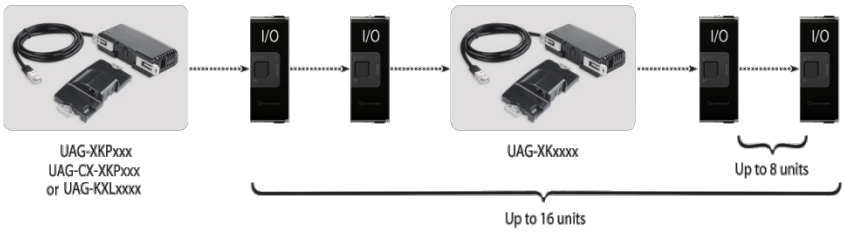

This example combines all types of adapters:

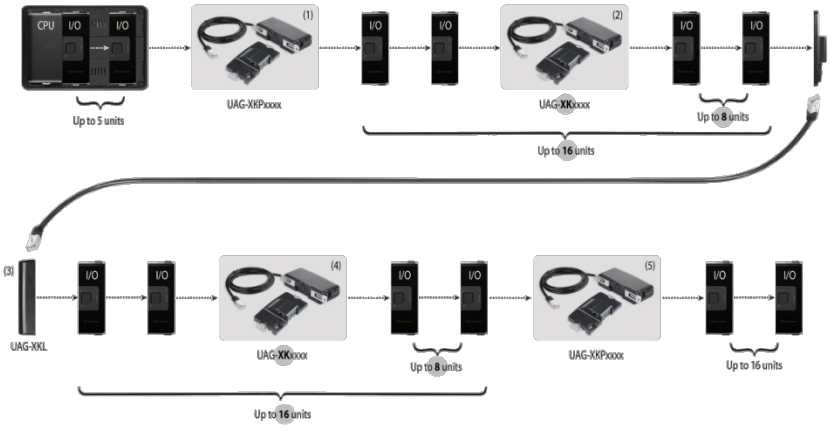

Daisy-chaining Configuration Summary

The tables below show the possible configurations between two cabinets.

Optional configurations in the cabinet with the UniStream Controller

On Board	1st	2nd	Max. Modules
CPU	-	-	5
	XK	-	8
	XKP	-	21
	XKP	XK	21
	XK	XKP	24
	XKP	XKP	37

Optional configurations in the other cabinet

3rd	4th	5th	Max. Modules
XKL	-	-	16
	XK	-	16
	XKP	-	32
	XKP	XK	32
	XK	XKP	32
	XKP	XKP	48

XK-UAG-XKxxxx (Short Range Local Expansion Adapter without power supply)
XKP-UAG-XKPxxxx (Short Range Local Expansion Adapter with power supply)
XKL-UAG-XKLxxxx (Long Range Local Expansion Adapter)

NOTE Each combination in the right table can be used with each combination in the left table. They are independent of each other and the total number of I/O modules that are supported is the sum of the two tables (Maximum of 85).

UniStream™ controllers comprising an I/O Expansion Jack

Note that in the case of UniStream™ controllers comprising an I/O Expansion Jack, you must use the UAG-CX-XKPxxx, and it must be the adaptor that is directly connected to the controller.

Optional configurations in the cabinet with the UniStream Controller

	1st	2nd	Max. Modules
Controller jack	-	-	0
	CX	-	16
		XK	24
		XKP	32

Optional configurations in the other cabinet

3rd	4th	5th	Max. Modules
XKL	-	-	16
	XK	-	16
	XKP	-	32
	XKP	XK	32
	XK	XKP	32
	XKP	XKP	48

NOTE The total number of I/O modules that are supported is the sum of the two tables (Maximum of 80).

Environmental	
Protection	IP20, NEMA1
Operating temperature	-20°C to 55°C (-4°F to 131°F)
Storage temperature	-30°C to 70°C (-22°F to 140°F)
Relative Humidity (RH)	5% to 95% (non-condensing)
Operating Altitude	2,000 m (6,562 ft)
Shock	IEC 60068-2-27, 15G, 11ms duration
Vibration	IEC 60068-2-6, 5Hz to 8.4Hz, 3.5mm constant amplitude, 8.4Hz to 150Hz, 1G acceleration

Dimensions	UAG-XKxxx	UAG-XKPxxx	UAG-CX-XKPxxx	UAG-XKPLxxxx
Weight	Base: 65 g (0.14 lb) End: 142 g (0.31 lb)	Base: 65 g (0.14 lb) End: 150 g (0.33 lb)	Base: 15 g (0.033 lb) End: 150 g (0.33 lb)	Base: 64 g (0.14 lb) End: 92 g (0.2 lb)
Size	Refer to the images below			

Base Unit (UAG-XKxxx, UAG-XKPxxx and UAG-XKPLxxxx)

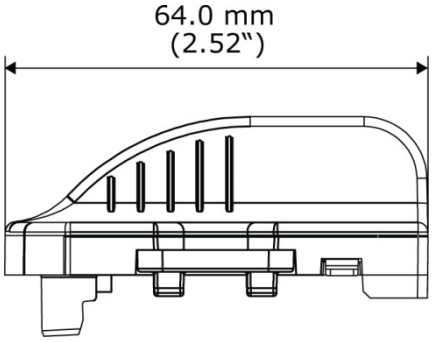

Top View

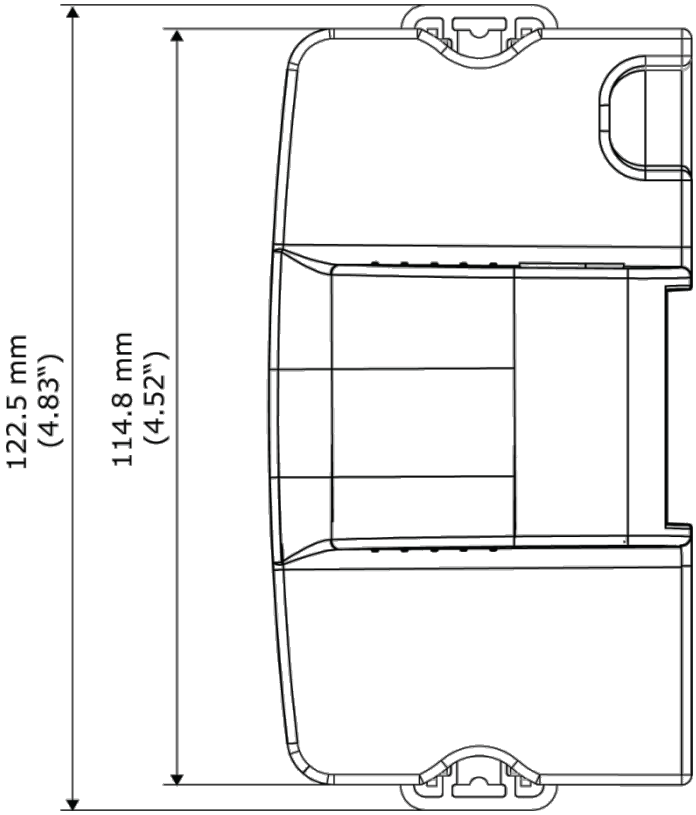

Side View

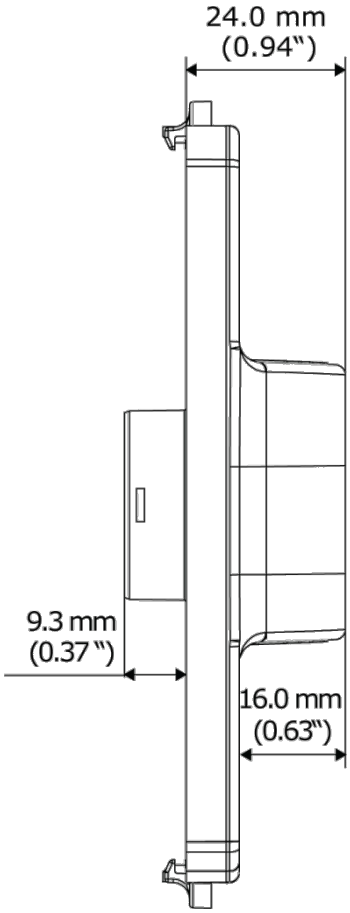

Front View

Base Unit (UAG-CX-XKPxxx)

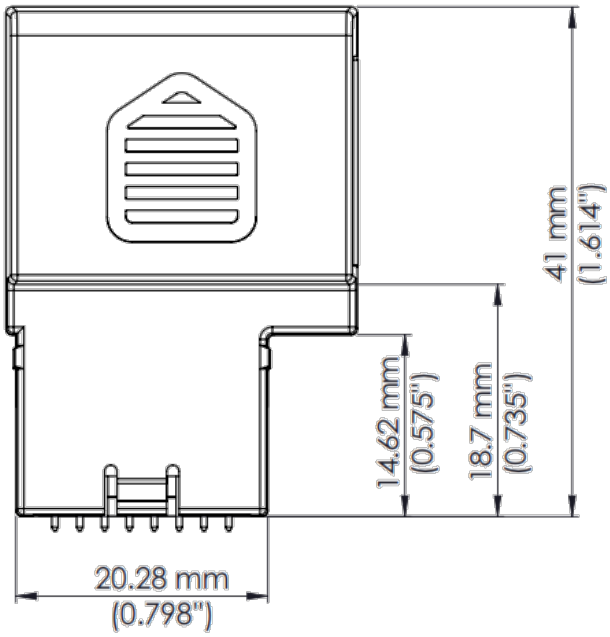

Top View

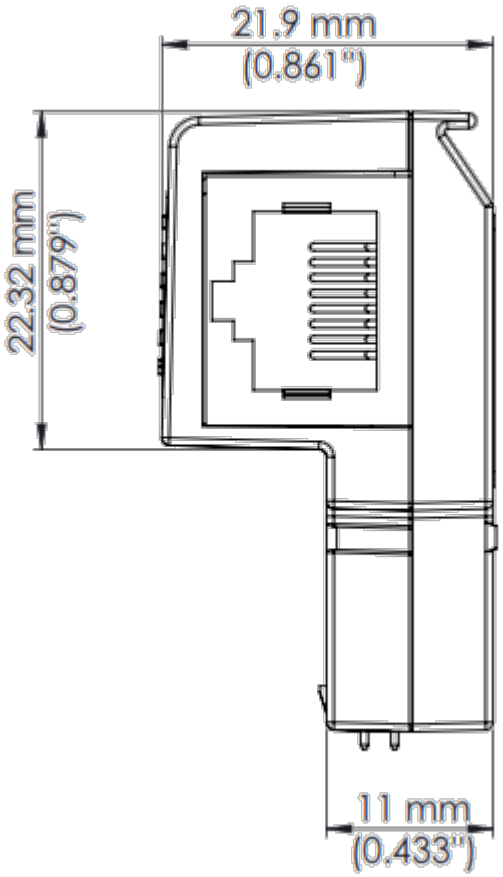

Side View

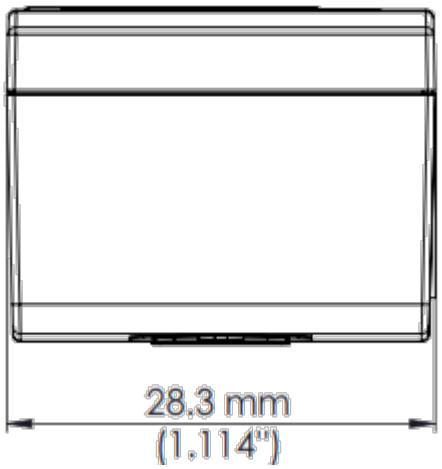

Front View

End Unit

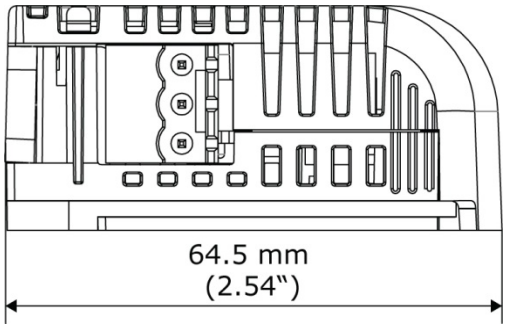

Top View

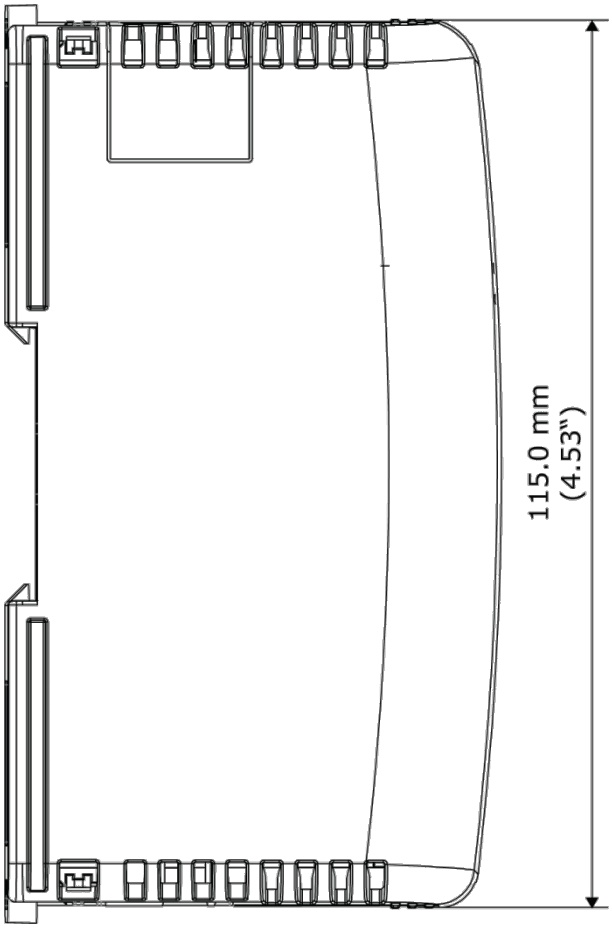

Side View

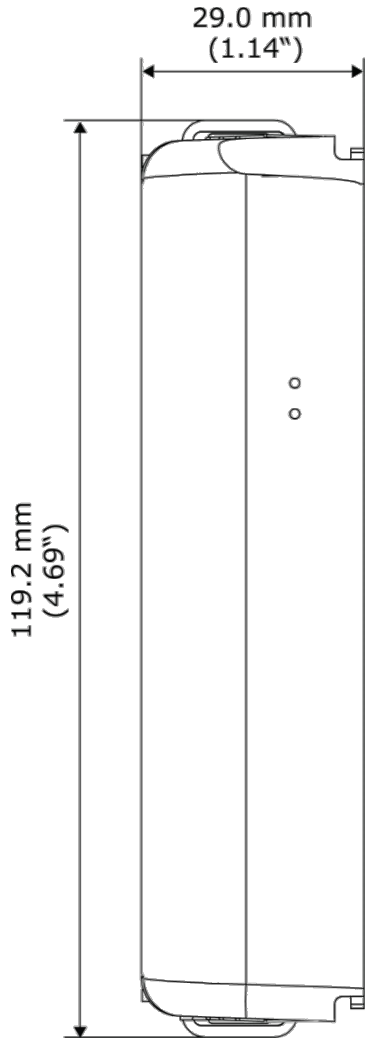

Front View

The information in this document reflects products at the date of printing. Unitronics reserves the right, subject to all applicable laws, at any time, at its sole discretion, and without notice, to discontinue or change the features, designs, materials and other specifications of its products, and to either permanently or temporarily withdraw any of the forgoing from the market.

All information in this document is provided "as is" without warranty of any kind, either expressed or implied, including but not limited to any implied warranties of merchantability, fitness for a particular purpose, or non-infringement. Unitronics assumes no responsibility for errors or omissions in the information presented in this document. In no event shall Unitronics be liable for any special, incidental, indirect or consequential damages of any kind, or any damages whatsoever arising out of or in connection with the use or performance of this information.

The tradenames, trademarks, logos and service marks presented in this document, including their design, are the property of Unitronics (1989) (R"G) Ltd. or other third parties and you are not permitted to use them without the prior written consent of Unitronics or such third party as may own them.

08/17